B 3548 Li (2016)

Documents

Brushcutter Battery

Technical information

Article number	272361000/A16
Item Status	Available
Season	2015-2017
Brand Code	Alpina
Cutting width	36 cm
EAN code	8008984639874
Power Source	Lithium-ion battery
Gross weight	7 kg
Handle type	Loop
Harness	Single
Nylon diameter	2 mm
Product Name	B 3548 Li
Motor type	Brushless
Net weight	5,5 kg
Sound power level (LWA)	100 dB(A)
Nylon head type	Tap & Go dual line
Packaging dimensions (LxWxH)	970 X 260 X 220 mm
Shaft type	Straight Split
SubCategory	Bruschutter battery
Blade type	4T (255 mm)
Included tools kit	-
Motor power	235 W
Suggested battery capacity	4.0 Ah
Maximum speed	5500 rpm
Soft grip handle	Yes
Battery included	No
Battery charger included	No
Net weight without cutting system	4,7 kg
Working time (+/- 20%)	24 min
Vibration level (left/right handle)	3,0 / 3,11 m/s²
Pipe tube diameter	25,4 mm
Inner shaft diameter	5 mm
Battery voltage	48 V

Copyright STIGA A/S

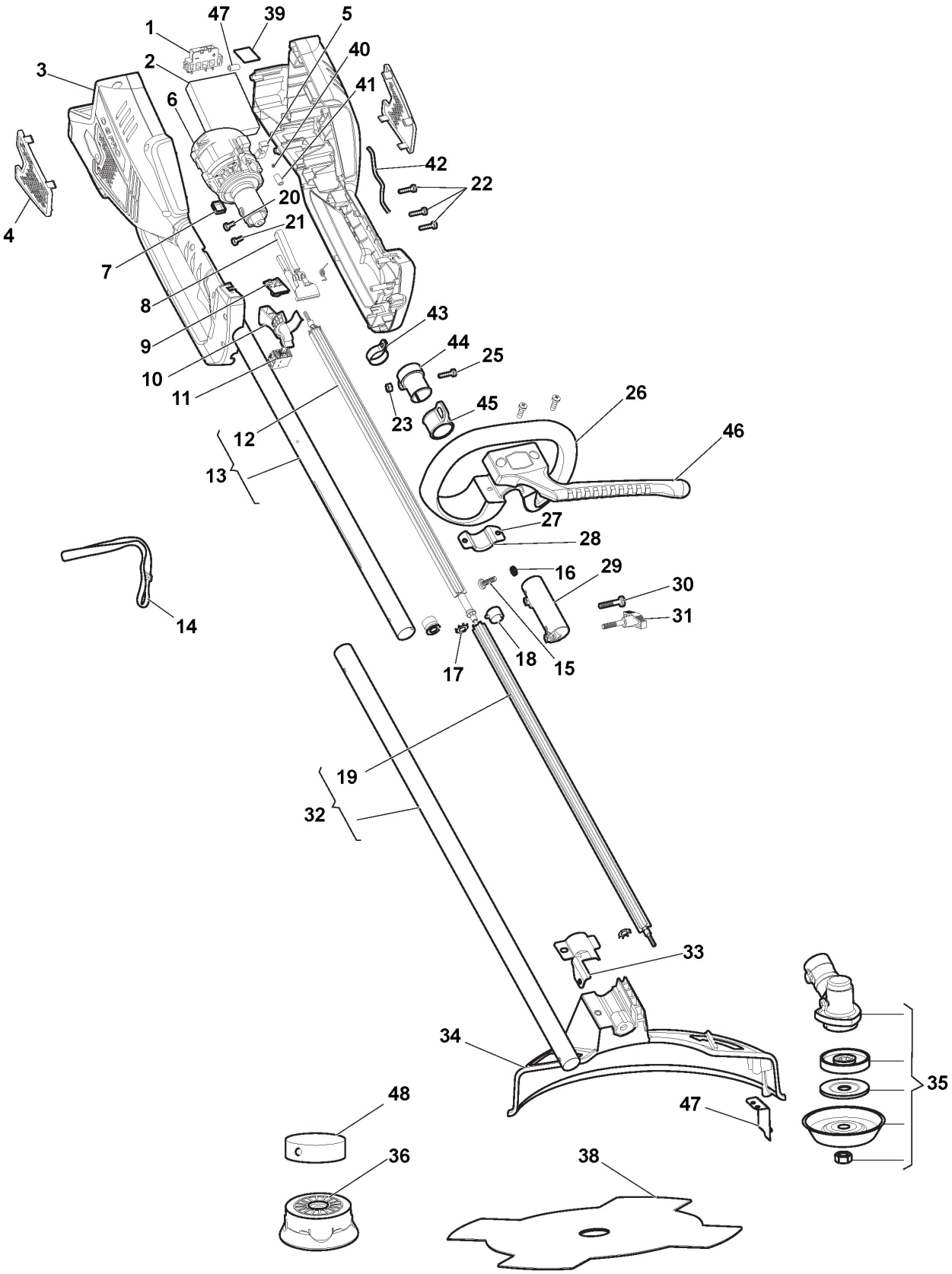

Copyright STIGA A/S

Reference	Qty	Item number	Description	Notes	From	Up to
1	1	118803304/0	Insert block			
2	1	118804126/0	48V PCB			
3	1	118804127/0	Housing, White			
4	1	118803389/0	Cover, Yellow			
5	1	118804125/0	Rubber Washer			
6	1	118803366/0	Engine			
7	2	118804124/0	Rubber Washer			
8	1	118803410/0	Button, Yellow			
9	1	118803293/0	Spring			
11	1	118803473/0	Switch			
12	1	118803236/0	Flexible shaft			
13	1	118804118/0	Upper Tube Assy			
14	1	118803347/0	Harness			
15	1	112727790/0	Screw			
16	1	6981300	Washer			
17	2	118803284/0	Ring			
18	1	118803283/0	Washer			
19	1	118803382/0	Flexible shaft			
20	1	112726388/0	Screw			
21	1	112727790/0	Screw			
22	16	112728099/1	Screw			
23	1	112291000/0	Nut			
25	1	112735404/0	Screw			
26	1	118803418/1	Front Handle			
27	1	118803270/0	Clamp			
28	1	118803326/0	Washer			
29	1	118803274/0	Clamp			
30	2	9988-3545-12	Screw			
31	1	118803425/1	Knob, Grey			
32	1	118804119/0	Tube			
33	1	118803282/0	Plate			
34	1	118803449/0	Stone Guard			
35	1	118803239/1	Gear Case Assy			
36	1	118803238/0	Hedges Nylon Head			
38	1	118804120/0	Blade			
39	2	118804115/0	Sponge Gasket			
40	2	118804116/0	Fork			
41	6	118804114/0	Heat shrinkable tube			
42	25	118804117/0	Conductor casing			
43	1	118804121/0	Embrace hoop			
44	1	118804130/0	Support			
45	1	118804129/0	Support			
46	1	118804128/0	Front Handle Barrier			
47	1	118804122/0	Line Cutter Blade			
48	1	118804123/0	Spool Cover			

Copyright STIGA A/S